M8 male 90° / M8 female 90° LED

PUR 3x0.25 bk UL/CSA+robot+drag chain 1m

Male 90° – female 90°
M8 – M8, 3-pole
2× LED (PNP), (NPN) on request
Art-No. 7005 - M8 Lite - (plastic hexagonal screw) on request
Further cable lengths on request.
Plastic housings with good resistance against chemicals and oils.
The resistance to aggressive media should be individually tested for your application. Further details on request.

Link to Product

Illustration

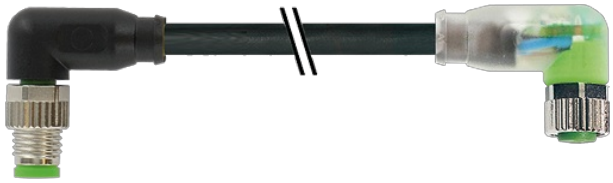

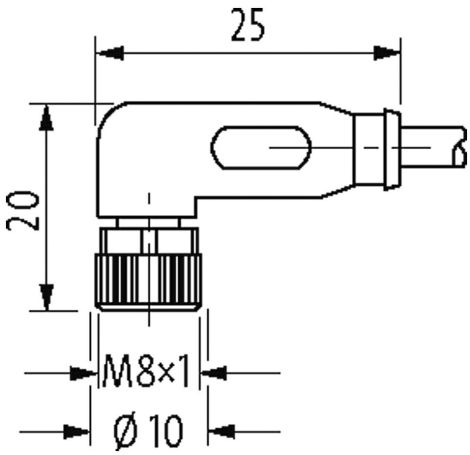

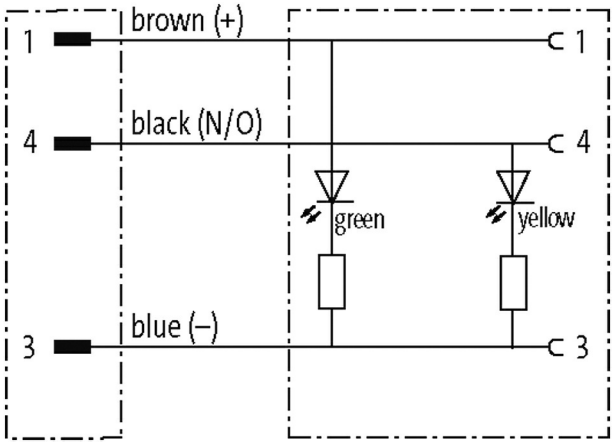

Product may differ from Image

Approvals

The information in this brochure has been compiled with the utmost care.
Liability for the correctness completeness and topicality of the information is restricted to gross negligence. Version: 11/20

MURR ELEKTRONIK
stay connected

cCSAus

c UL us Listed *

* only for products with UL/CSA approved cable

Form	
Form	88101
General data	
Standards	DIN EN 61076-2-104 (M8)
Pollution Degree	3
Temperature range	-25...+85 °C, depending on cable quality
Cables	
No./diameter of wires	3× 0.25 mm²
Wire isolation	PP (br, bl, bk)
C-track properties	10 Mio.
Material (jacket)	PUR (UL/CSA), welding spark
Outer Ø	4.3 mm ±5%
Bend radius (moving)	10× outer Ø
Temperature range (fixed)	-40...+80 °C
Temperature range (mobile)	-25...+80 °C
Cable identification	650
Cable Type	5 (PUR schweißfunkenbeständig)
Approval (cable)	cURus (AWM-Style 20549/10493); CE conform
Cable weight [g/m]	26,40
Material (wire)	Cu wire, bare
Resistor (core)	max. 79 Ω/km (20 °C)
Single wire Ø (core)	0.1 mm
Construction (core)	32× 0.1 mm (multi-strand wire class 6)
Diameter (core)	3× 0.25 mm²
AWG	similar to AWG 24
Material (wire isolation)	PP
Material property (wire isolation)	CFC-, halogen-, cadmium-, silicone- and lead-free
Shore hardness (wire isolation)	74 ±3 D
Wire-Ø incl. isolation	1.25 mm ±5%
Color/numbering of wires	br, bk, bl
Stranding combination	3 wires twisted
Shield	no
Material (jacket)	PUR
Material property (jacket)	CFC-, halogen-, cadmium-, silicone- and lead-free, matt, low-adhesion, machine easy to process, abrasion-resistant, hydrolysis-, microbial- and welding spark resistant
Shore hardness (jacket)	58 ±3 D
Outer-Ø (jacket)	4.3 mm ±5%
Color (jacket)	black
chemical resistance	good resistance to oil, gasoline and chemicals (EN 60811-404)
thermal resistance	flame retardant UL, FT2, IEC 60332-1, IEC 60332-2-2, welding spark resistant
Nominal voltage	300 V AC
Test voltage	2500 V AC
Current load capacity	to DIN VDE 0298-4
Temperature range (fixed)	-40...+80 °C, (+90 °C at max. 10 000 operating hours)

The information in this brochure has been compiled with the utmost care.
Liability for the correctness completeness and topicality of the information is restricted to gross negligence. Version: 11/20

Temperature range (mobile)	-25...+80 °C, (+90 °C at max. 10 000 operating hours)
Bend radius (fixed)	5× outer Ø
Bend radius (moving)	10× outer Ø
No. of bending cycles (C-track)	max. 10 Mio. (25 °C)
Traversing distance (C-track)	max. 5 m (horizontal)
Travel speed (C-track)	max. 3.3 m/s
Acceleration (C-track)	max. 5 m/s²
Torsion stress	±360°/m
No. of torsion cycles	max. 1 Mio. (25 °C)
Torsion speed	35 cycles/min
Jacket Color	black
Technical Data	
Operating voltage	24 V DC ±25%
Operating voltage (only UL listed)	max. 30 V DC
Rated surge voltage	0.8 kV
Operating current per contact	max. 4 A
Material group	IEC 60664-1, category I
LED display	(yellow/green)
Locking of ports	Screw thread (M8×1 mm) recommended torque 0.4 Nm, self-securing
Compression gland	M8 (SW9)
Protection	IP65, IP66K, IP67 inserted and tightened (EN 60529)
Locking material	Zinc die casting, matte nickel plated
Material	PUR
suitable for corrugated tube (internal Ø)	6.5 mm
Commercial data	
country of origin	DE
customs tariff number	85444290
eClass	27061801
Packaging unit	1
Sketch	

The information in this brochure has been compiled with the utmost care.
Liability for the correctness completeness and topicality of the information is restricted to gross negligence. Version: 11/20

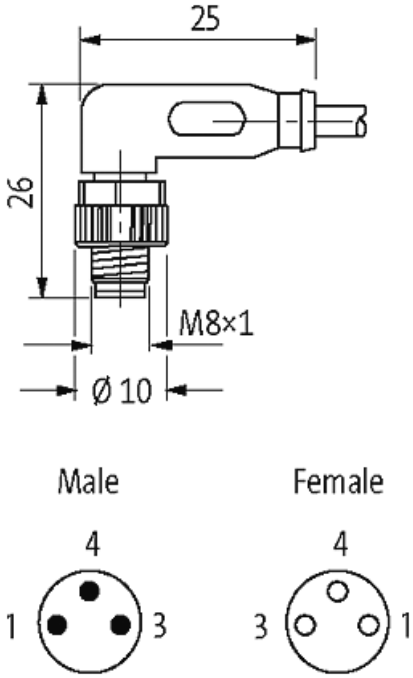

Product may differ from Image

The information in this brochure has been compiled with the utmost care.
Liability for the correctness completeness and topicality of the information is restricted to gross negligence. Version: 11/20